Comp. & Maths. with Appls. Vol. 12B, No. 5/6, pp. 1091–1101, 1986
Printed in Great Britain

0886-9561/86 $3.00 + 0.00
Pergamon Journals Ltd

GENERALIZED EXPONENTIAL AND LOGARITHMIC FUNCTIONS

C. W. CLENSHAW,[1] D. W. LOZIER,[2] F. W. J. OLVER[3] and P. R. TURNER[1]

[1]Department of Mathematics, University of Lancaster, Lancaster LA1 4YL, England

[2]Mathematical Analysis Division, National Bureau of Standards, Gaithersburg, MD 20899, U.S.A.

[3]Institute for Physical Science and Technology, University of Maryland, College Park, MD 20742, U.S.A.

(*Received* 10 *March* 1985; *revised* 29 *April* 1985)

Abstract—Generalizations of the exponential and logarithmic functions are defined and an investigation is made of two possible versions of these functions. Some applications are described, including computer arithmetic, properties of very large and very small numbers, and the determination of functional roots.

1. INTRODUCTION

In a volume dedicated to the memory of Yudell Luke, it seems appropriate to discuss the properties of particular special functions. The present paper explores some of the properties and uses of two such functions, the *generalized exponential function* (g.e.f) and the *generalized logarithm* (g.l). Neither has, as yet, received a great deal of attention in the literature. Indeed, at the present time it is the case that we cannot offer definitions of these functions with the confidence that they will be accepted for the long-term future. It seems likely that there will be at least two functions competing for the title of "the generalized exponential function", and it is possible that each will be the subject of increasing interest. Similarly at least two functions will be competing for the title of "the generalized logarithm".

We begin by defining a *class* of g.e.f's. We say that ϕ is a g.e.f if it satisfies the following three conditions

$$\phi(x+1) = e^{\phi(x)} \quad \text{for} \quad -1 < x < \infty \tag{1.1}$$

$$\phi(0) = 0 \tag{1.2}$$

$$\phi(x) \text{ is strictly increasing for } 0 \leqslant x \leqslant 1. \tag{1.3}$$

It follows that $\phi(x)$ is strictly increasing from $-\infty$ to ∞ as x increases from -1 to ∞. Therefore ϕ has an inverse, ψ say, on $(-\infty, \infty)$. This inverse is the g.l corresponding to ϕ, and its properties that correspond to (1.1), (1.2) and (1.3) are given by

$$\psi(e^x) = 1 + \psi(x) \quad \text{for} \quad -\infty < x < \infty \tag{1.4}$$

$$\psi(0) = 0 \tag{1.5}$$

$$\psi(x) \text{ is strictly increasing for } 0 \leqslant x \leqslant 1. \tag{1.6}$$

In addition $\psi(x)$ is strictly increasing from -1 to ∞ as x increases from $-\infty$ to ∞.

All g.e.f's take the same values at the positive integers, namely $\phi(1) = 1$, $\phi(2) = e$, $\phi(3) = e^e$ and so on. The problem of defining "the g.e.f" is analogous to that of defining the gamma function, once the factorial function has been defined on the positive integers.

The interest of the authors in the g.e.f and g.l was aroused by the possibilities and advantages of their use for the representation and manipulation of real numbers within a computer. This application was described and discussed in [1], and it gives rise to what is now known as *level-index* (li) arithmetic, in which any positive real number X, however

large, is represented in the computer by its g.l $x = \psi(X)$, so that $X = \phi(x)$. For this practical purpose it is obviously desirable to complete the definitions of ϕ and ψ in such a way as to make computation in the li system as simple as possible. This is described in Section 2. In Section 3 we consider other possible choices for the g.e.f and g.l. In the remaining sections we discuss various applications.

2. C^1 GENERALIZED EXPONENTIAL AND LOGARITHMIC FUNCTIONS

The simplest admissible choice of $\phi(x)$ on the interval [0, 1] is given by

$$\phi(x) = x, \quad 0 \leqslant x \leqslant 1. \tag{2.1}$$

Application of (1.1) then yields

$$\phi(x) = \ln(x+1), \quad -1 < x \leqslant 0; \quad \phi(x) = e^{x-1}, \quad 1 \leqslant x \leqslant 2 \tag{2.2}$$

and generally

$$\phi(x) = e^{e^{e^{\cdot^{\cdot^{\cdot^{e^{x-l}}}}}}}, \quad l \leqslant x \leqslant l+1 \tag{2.3}$$

where l is a positive integer and the process of exponentiation is performed l times.

Correspondingly, we have

$$\psi(x) = x, \quad 0 \leqslant x \leqslant 1 \tag{2.4}$$

$$\psi(x) = e^x - 1, \quad -\infty < x \leqslant 0; \quad \psi(x) = 1 + \ln x, \quad 1 \leqslant x \leqslant e \tag{2.5}$$

and generally

$$\psi(x) = l + \ln^{(l)} x, \quad 1 \leqslant x \tag{2.6}$$

where $\ln^{(l)} x$ is the lth repeated logarithm of x and l is determined by the condition

$$0 \leqslant \ln^{(l)} x < 1. \tag{2.7}$$

Next on differentiating (1.1) and replacing x by $x-1$, we obtain

$$\phi'(x) = \phi(x)\phi'(x-1), \quad \phi''(x) = \phi'(x)\phi'(x-1) + \phi(x)\phi''(x-1). \tag{2.8}$$

From these equations and (2.1) we see that $\phi'(x)$ is continuous at $x = 1$, while $\phi''(x)$ jumps from 0 to 1 at this point. Since this behaviour is propagated to all positive integer values of the argument, it is apparent that

$$\phi(x) \in C^1(-1, \infty), \quad \psi(x) \in C^1(-\infty, \infty). \tag{2.9}$$

These smoothness properties are valuable for the efficient performance of li arithmetic; for example, they eliminate the phenomenon of "wobbling precision" [1].

The salient property of the function ϕ is its ability to represent large numbers with an appropriate balance between precision and economy. A simple example suffices to illustrate the point: $\phi(4.5) = 5.64 \times 10^{78}$, rounded to three significant figures, while if $\phi(5.5)$ is written similarly in floating-point decimal form, then its *exponent* exceeds 10^{78}, and it is scarcely sensible to attempt to represent its precision by specifying a certain number of significant figures. In these circumstances a new measure of precision is demanded: such a measure was proposed in [1]. This derives from the idea of regarding the distance between two real numbers X and Y as being the metric given by the difference between their g.l's $\psi(X)$ and $\psi(Y)$. This means of course that if X and Y both lie in [0, 1], then this distance is simply the familiar absolute distance $|X - Y|$, while if X and Y both lie in [1, e] then it is $|\ln(X/Y)|$. The latter is precisely the relative distance measure proposed by Olver [7] for floating-point arithmetic; it is similar to the more conventional notion of relative distance given by $|(X/Y) - 1|$ or $|(Y/X) - 1|$, but is more satisfactory because it

is a metric. When X and Y lie in other intervals, the new metric is simply a natural generalization of these familiar concepts.

In brief, we say that $\bar{X} = \phi(\bar{x})$ represents $X = \phi(x)$ with a *generalized precision* α if

$$|\bar{x} - x| \leqslant \alpha. \tag{2.10}$$

Equivalent ways of expressing this relationship are

$$\bar{x} \simeq x; \quad \mathrm{ap}(\alpha) \tag{2.11}$$

in which "ap" denotes absolute precision, or absolute error, and

$$\bar{X} \simeq X; \quad \mathrm{gp}(\alpha) \tag{2.12}$$

in which "gp" denotes generalized precision.

To illustrate the significance of this notation numerically we now give examples, together with conventional equivalents, at increasing levels of magnitude. In each case we give "almost equivalent" statements: we are prevented from using the equivalence symbol $\Leftrightarrow$ by the fact that the numbers following the colons are rounded in all cases except (i).

(i) $x \simeq \phi(0.526)$; $\mathrm{gp}(\frac{1}{2} \times 10^{-3})$: $0.5255 \leqslant x \leqslant 0.5265$.

(ii) $x \simeq \phi(1.526)$; $\mathrm{gp}(\frac{1}{2} \times 10^{-3})$: $1.691 \leqslant x \leqslant 1.693$.

(iii) $x \simeq \phi(2.526)$; $\mathrm{gp}(\frac{1}{2} \times 10^{-3})$: $5.427 \leqslant x \leqslant 5.436$.

(iv) $x \simeq \phi(3.526)$; $\mathrm{gp}(\frac{1}{2} \times 10^{-3})$: $227.4 \leqslant x \leqslant 229.5$.

(v) $x \simeq \phi(4.526)$; $\mathrm{gp}(\frac{1}{2} \times 10^{-3})$: $5.535 \times 10^{98} \leqslant x \leqslant 4.516 \times 10^{99}$.

Case (v) illustrates once more the limitations of conventional measures of precision for large numbers: here there are no common significant figures in the endpoints of the interval in which x is known to lie. We conclude that a new measure is needed and that the notion of generalized precision is sufficient to meet this need in practical and theoretical situations. A more complete justification, based upon the arithmetic considerations which arise in the use of li arithmetic, will be found in [1].

3. ANALYTIC GENERALIZED EXPONENTIAL AND LOGARITHMIC FUNCTIONS

By modifying the choices (2.1) and (2.4) it is possible to consruct g.e.f's and g.l's that belong to $C^2(-1, \infty)$ and $C^2(-\infty, \infty)$, respectively, or are even smoother. For example, on replacing (2.1) by

$$\phi(x) = ax - \tfrac{1}{4}a^2x^2 + \tfrac{1}{6}a^2x^3, \quad 0 \leqslant x \leqslant 1 \tag{3.1}$$

where $a = 6 - 2\sqrt{6}$, we obtain a g.e.f in $C^2(-1, \infty)$. The question naturally arises: can we construct a g.e.f that is C^∞ on $(-1, \infty)$ or even analytic on a complex domain that contains this interval? [Of course, this analytic function must be real on $(-1, \infty)$]. The corresponding question for the g.l was answered affirmatively in 1948 by Kneser [6]. He showed that there is an analytic g.l that is real on the interval $(-\infty, \infty)$. He also constructed regions in the complex plane on which this g.l is analytic and indicated the location and nature of some of its singularities.

More recently, Walker [8] computed numerical values of an analytic g.l. His procedure is to assume the existence of a series expansion of the form

$$\psi(x) = c_1x + c_2x^2 + c_3x^3 + \cdots. \tag{3.2}$$

This enables $\psi(e^x)$ to be expanded in powers of x, and by substituting in equation (1.4) we obtain an infinite set of simultaneous linear equations for the unknowns $\{c_j\}$. Taking the first n such equations and neglecting c_j for $j > n$, we have a set of n equations in n unknowns. These equations may be solved numerically to give a vector $\{c_j^{(n)}\}$, say. Interest

in the results is enhanced by the apparent convergence of the sequence of solution vectors for increasing n, though we know of no proof of actual convergence.

The existence and computability of an analytic g.l prompts the next question. Is there a *unique* analytic g.l and a corresponding unique analytic g.e.f? This is easy to answer; if there is one analytic g.l, then there are infinitely many. We have only to add a suitable periodic analytic function of any g.l to itself to obtain another g.l. For example, if ψ is an analytic g.l and k is a constant in the interval $(-1, 1)$, then another analytic g.l is supplied by

$$\psi + (2\pi)^{-1}k \sin 2\pi\psi. \tag{3.3}$$

Accordingly, we have attempted to compute other analytic g.e.f's and the corresponding g.l's by applying an iterative scheme that relies on the essential equivalence of two forms of numerical approximation of a function on a given interval $[a, b]$, say. Let

$$f(x) = F(\xi) = \sum_{r=0}^{n}{}' a_r T_r(\xi) \tag{3.4}$$

where

$$2x = (b - a)\xi + (a + b) \tag{3.5}$$

T_r being the Chebyshev polynomial of the first kind, and the prime in (3.4) implying, as usual, that the first term in the sum is to be halved. Then the representation of f by the *coefficient-vector* $\{a_r\}_{r=0}^{n}$ is equivalent to its representation by the *value-vector* $\{F(\cos r\pi/n)\}_{r=0}^{n}$. That is to say, either vector may be computed from the other without loss of precision; see, for example, [3], [4].

We now suppose that we have an initial approximation to $\phi(x + 1)$ on the interval $[-1, 0]$ in the form of a coefficient-vector. We can use this to find the value-vector for $\phi(x + 1)$ on $[-1, 1]$: values on $[-1, 0]$ may be found directly by summation of series, while those on $[0, 1]$ require the application of the recursion relation (1.1). This value-vector yields a coefficient-vector for $\phi(x + 1)$ on $[-1, 1]$, and this in turn is used to compute a value-vector for $\phi(x + 1)$ on $[-1, 0]$, and hence a coefficient-vector for this interval. This completes one cycle of the iterative procedure.†

This procedure, initiated with various starting values and values of n, does indeed appear to suggest new g.e.f's; however, none of them is clearly preferable to that formed by rearranging and inverting Walker's power series. We give in Table 1 the coefficients in such a rearrangement, together with those of the inverse function. [In this table $T_r^*(x)$ denotes $T_r(2x - 1)$ as usual; cf. equations (3.4) and (3.5).] It is not easy to assess the accuracy of the entries in Table 1; the existence of a multiplicity of analytic g.e.f's is reflected in the conditioning of Walker's equations, which deteriorates rapidly as n increases. However, our values serve to indicate the nature of the solution obtained, and in particular its close proximity to the C^1 g.e.f of Section 2, whose Chebyshev series expansion has coefficients $a_0 = 1$, $a_1 = 1/2$, $a_j = 0$ $(j \geqslant 2)$.

The next question is whether, from this multiplicity of g.l's, it is possible to select a *canonical* or *distinguished* function that alone enjoys an additional desirable property. If, for example, this property is that the g.l should have the most rapidly convergent Chebyshev-series expansion on the interval [0, 1], then so far the numerical evidence points in the direction of the function computed by Walker. However, we are unaware of any analytical investigation on these lines.

†In practice, certain modifications are implemented. On each computation of a value-vector, the known values of ϕ at integer arguments are inserted whenever possible. Moreover, convergence properties of the algorithm are often improved by starting each iterative cycle with a linear combination of the latest two approximations, rather than merely the most recent. Other refinements may be applied with practical advantage, but these details do not concern us here.

Table 1

r	a_r	b_r
0	0.99889 731	1.00109 464
1	0.49443 379	0.50544 366
2	0.00072 417	−0.00074 230
3	0.00548 385	−0.00554 163
4	−0.00016 650	0.00020 286
5	0.00008 089	0.00009 992
6	−0.00000 617	−0.00000 814
7	0.00000 146	−0.00000 200
8	−0.00000 016	0.00000 027
9	0.00000 002	0.00000 005
10	0.00000 000	0.00000 000
11	0.00000 000	0.00000 000
12		

$\phi(x) = \Sigma' a_r T_r^*(x) \quad \psi(x) = \Sigma' b_r T_r^*(x)$

4. li ARITHMETIC VIA SURFACE FITTING

In Section 2 we implied that the C^1 g.e.f and g.l that were constructed there are the most suitable functions for implementing li arithmetic. This statement is made on the assumption that li arithmetic operations are carried out directly, based on recursion relations given in [2]. We now describe another possible procedure.

The li operation of addition, for example, consists of finding the value of z that satisfies the equation

$$\phi(z) = \phi(x) + \phi(y) \tag{4.1}$$

for given positive values of x and y. This equation defines a surface $z = z(x, y)$. If this surface can be fitted economically, for example, by polynomials or rational functions, then li addition can be implemented by computing the value of z on the surface that corresponds to given values of x and y. Similar observations apply to the other li arithmetic operations, although because multiplication and division of two g.e.f's $\phi(x)$ and $\phi(y)$ are equivalent to addition and subtraction, respectively, of $\phi(x-1)$ and $\phi(y-1)$ when $x, y \geqslant 1$, the surface fitting need be undertaken only for the processes of addition and subtraction. Here emerges a possible use for analytic g.e.f's and g.l's. Because of their inherently greater smoothness, they may lead to less complicated and more economical surface fits than the C^1 functions of Section 2.

Figure 1 indicates the nature of the surface $z(x, y)$ for li addition within the cube $0 \leqslant x, y, z \leqslant 6$. Figure 2 provides a similar indication for subtraction. These surfaces were computed using the algorithms for addition and subtraction given in [2] for the g.e.f determined by (2.1).†

In Fig. 1 it will be observed that the surface develops a crease close to the plane $y = x$, a crease that becomes increasingly sharp as we move up the cube. Indeed by the time the top of the cube is approached the surface has effectively degenerated into two intersecting planes. This is a consequence of the fact that for large values of x, or y, or both quantities, the addition formula (4.1) effectively reduces to

$$z = \max(x, y); \tag{4.2}$$

compare Lemma 4.1 below.

The surface for the li subtraction operation is derivable from that for addition by change of axes: we have only to interchange x and z in (4.1) to convert this equation into the form

$$\phi(z) = \phi(x) - \phi(y). \tag{4.3}$$

†The surfaces have also been computed and plotted using the analytic g.l and the corresponding g.e.f generated from Walker's series expansion (3.2) in place of the C^1 g.l and g.e.f of Section 2. The resulting changes in the diagrams are imperceptible.

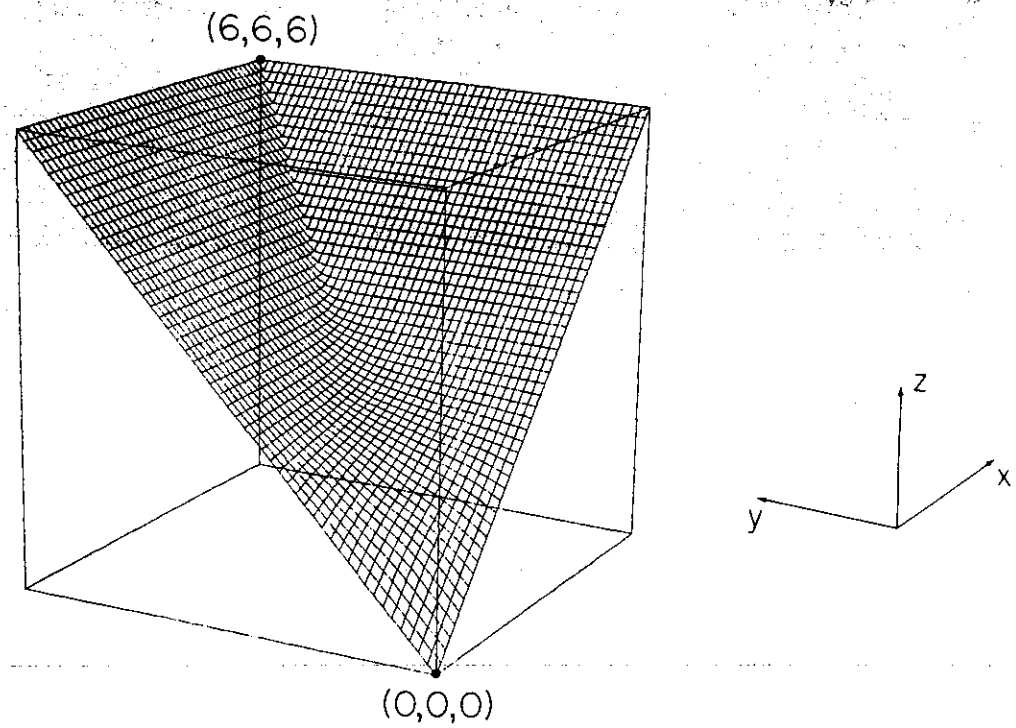

Fig. 1: li addition. $\phi(z) = \phi(x) + \phi(y)$.

The surface-fitting problem is quite different, however. As shown in Fig. 2, a crease again develops in the surface as we move up the cube near $y = x$, but on one side of this crease there is a precipitous drop or "cliff" to the plane $z = 0$.

The surface-fitting problems appear to be difficult both for addition and subtraction, owing to the rapidly changing nature of the surfaces near the plane $y = x$. Of the two, that

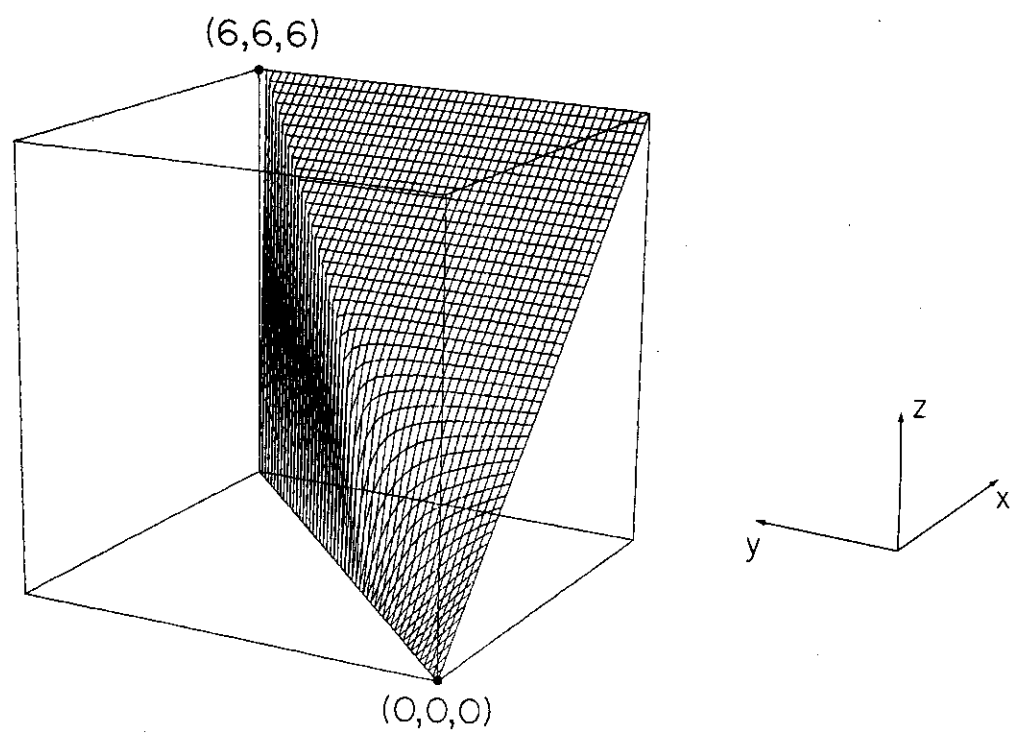

Fig. 2. li subtraction. $\phi(z) = \phi(z) - \phi(y)$.

for subtraction seems the more difficult because of the existence of the cliff. Initial attempts to fit each surface economically by double Chebyshev series expansions have proved to be unsuccessful.

We conclude this section with an analytic assessment of the approximate result (4.2).

Lemma 4.1

If ϕ is the g.e.f determined by (2.1), *then*

$$\phi(x)+\phi(y)\simeq\phi(x);\quad \mathrm{gp}(\alpha) \tag{4.4}$$

provided that

$$x\geqslant 1,\quad x\geqslant y\geqslant 0,\quad \phi'(x-1)\geqslant(\ln 2)/\alpha. \tag{4.5}$$

Proof. Since ϕ' is nondecreasing on $[0, \infty)$, it follows from the given conditions and the mean-value theorem that

$$\phi(x-1+\alpha)\geqslant\phi(x-1)+\alpha\phi'(x-1)\geqslant\phi(x-1)+\ln 2.$$

Exponentiation then yields

$$\phi(x+\alpha)\geqslant 2\phi(x)\geqslant\phi(x)+\phi(y).$$

This is the required result.

An analogous result for subtraction follows. It is provable in a similar manner.

Lemma 4.2

If ϕ is the g.e.f determined by (2.1), *then*

$$\phi(x)-\phi(y)\simeq\phi(x);\quad \mathrm{gp}(\alpha) \tag{4.6}$$

provided that

$$x-\alpha\geqslant 1,\quad x-\alpha\geqslant y\geqslant 0,\quad \phi'(x-\alpha-1)\geqslant(\ln 2)/\alpha. \tag{4.7}$$

Lemmas 4.1 and 4.2 need modification for other g.e.f's because in general it is not true that ϕ' is nondecreasing on $[0, \infty]$. However, the effective results for addition, subtraction, multiplication and division of large numbers—as typified by the approximate relation (4.2)—remain valid for all g.e.f's.

5. POWERS

The g.e.f and g.l can be used to study the approach to certain indeterminate limits. In the present section we consider the behaviour of the function

$$Z=X^Y. \tag{5.1}$$

We shall restrict $X\geqslant 1$ and $Y\geqslant 0$.

On setting

$$X=\phi(x),\quad Y=\phi(y),\quad Z=\phi(z) \tag{5.2}$$

in (5.1) and taking logarithms, we obtain

$$\phi(z-1)=\phi(x-1)\phi(y). \tag{5.3}$$

Figure 3 depicts the surface $z=z(x,y)$ defined by this equation within the cube

$$1\leqslant x\leqslant 6,\quad 0\leqslant y\leqslant 5,\quad 1\leqslant z\leqslant 6. \tag{5.4}$$

This surface was computed from formula (5.3) by means of the algorithm for multiplication given in [2].

Within the region $x\geqslant 2$, $y\geqslant 1$ the surface in Fig. 3 is the same as that in Fig. 1, except for translations of 2, 1 and 2 units parallel to the axes of x, y and z, respectively. This

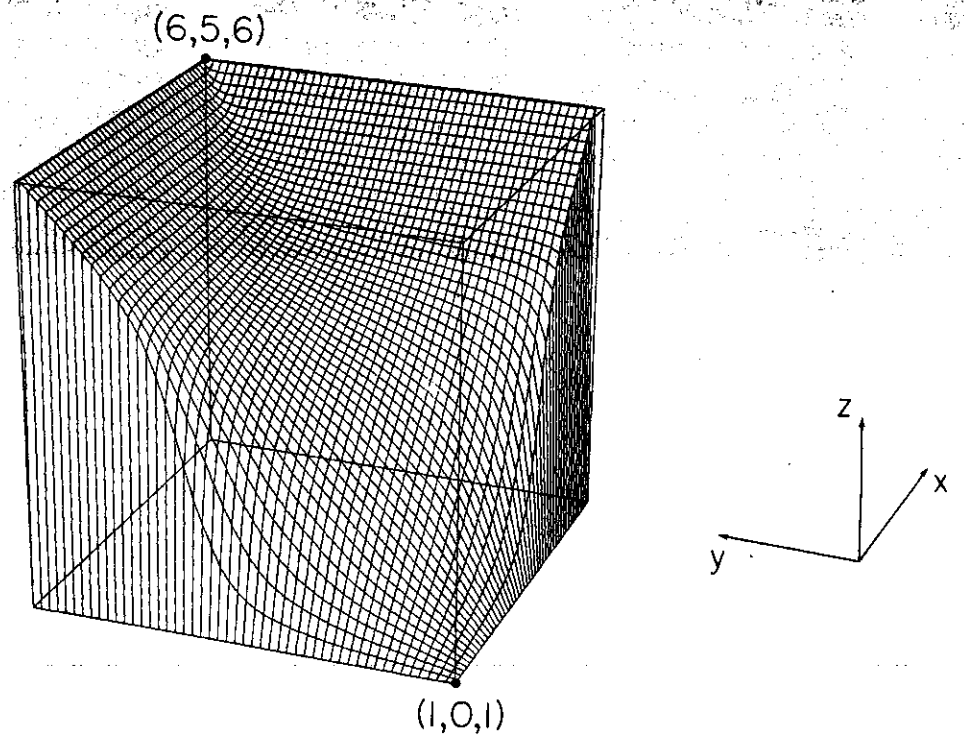

Fig. 3. Powers. $\phi(z) = \{\phi(x)\}^{\phi(y)}$.

is obvious on taking logarithms in (5.3)

$$\phi(z-2) = \phi(x-2) + \phi(y-1). \tag{5.5}$$

The character of the surface changes more rapidly between the planes $x = 1$ and $x = 2$, and also between the planes $y = 0$ and $y = 1$. For large values of $y\,(> x - 1)$ the value of z is indistinguishable from that of $y + 1$, except in the vicinity of $x = 1$ where there is a precipitous drop to the plane $z = 1$. Similarly, for large values of x the value of z is indistinguishable from that of x when $y < x - 1$, except near $y = 0$ where there is a cliff to the plane $z = 1$. This case is examined more carefully below.

In order to obtain a closer look at the behaviour of Z when Y is small, that is, when we are in the vicinity of the right-hand cliff of Fig. 3, set

$$X = \phi(x), \quad Y = 1/\phi(y), \quad Z = \phi(z). \tag{5.6}$$

Then (5.3) is replaced by

$$\phi(z-1) = \phi(x-1)/\phi(y). \tag{5.7}$$

Figure 4 depicts the surface defined by this equation within the cube (5.4). It was computed from formula (5.7) by means of the algorithm for division given in [2].

Again, since

$$\phi(z-2) = \phi(x-2) - \phi(y-1), \tag{5.8}$$

it follows that within the region $x \geqslant 2$, $y \geqslant 1$, $z \geqslant 2$ the surface in Fig. 4 is the same as that in Fig. 2, except for translations of 2, 1 and 2 units parallel to the axes of x, y and z, respectively. The two most interesting parts of the surface occur near the planes $y = x - 1$ and $y = 0$. First, the surface develops two creases near its intersection with $y = x - 1$ as x increases, and it eventually degenerates into three planes. Secondly, as y approaches zero with x fixed the surface changes abruptly upwards into an almost vertical plane.

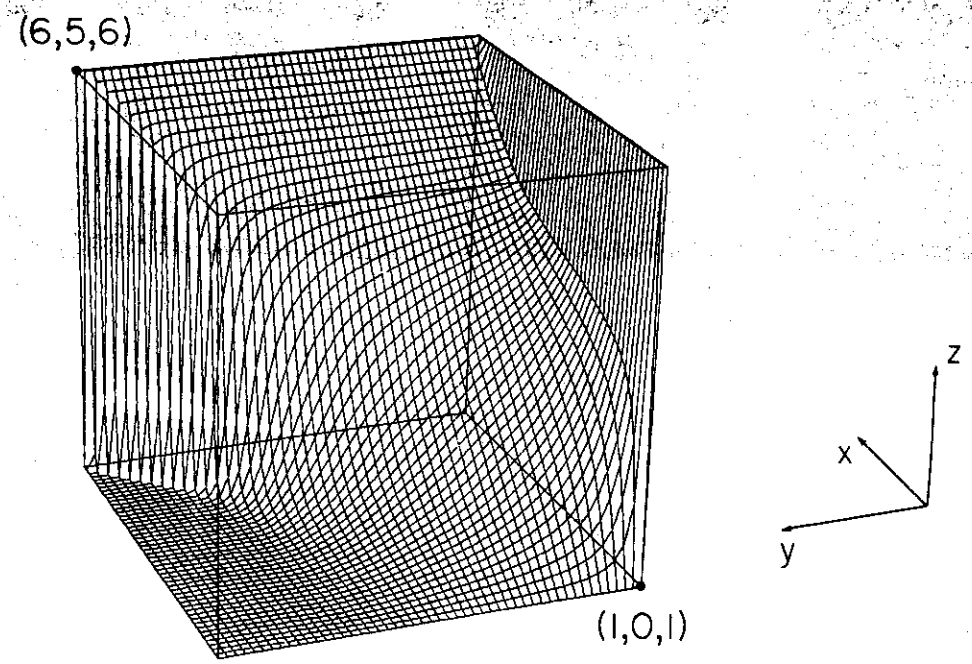

Fig. 4. Powers. $\phi(z) = \{\phi(x)\}^{1/\phi(y)}$.

Next, to examine the behaviour of Z when X is near to unity, that is, when we are in the vicinity of the left-hand cliff of Fig. 3 set

$$X = \phi\left[1 + \frac{1}{\phi(x-1)}\right], \quad Y = \phi(y), \quad Z = \phi(z), \quad \text{for } x \geqslant 2. \tag{5.9}$$

On taking logarithms we obtain†

$$\phi(z-1) = \phi(y)/\phi(x-1). \tag{5.10}$$

Comparison with (5.7) shows that the surface $z = z(x, y)$ defined by (5.1) and (5.9) is obtainable from that depicted in Fig. 4 by interchange of $x - 1$ and y.

Figure 5 draws together and presents, in a simple manner, some of the striking features of the power surfaces shown in Fig. 3 and 4. It consists of curves of z against y for selected constant values of X.

To produce these curves representing $Z = X^Y$, values of $z = \psi(Z)$ were plotted at equal intervals of $\psi(Y)$ for $Y \geqslant 1$ and at equal intervals of $\psi(1/Y)$ for $Y \leqslant 1$. The curve labelled n represents the case $x = n$, while that labelled n' represents its "dual", for which $x = 1 + 1/\phi(n-1)$.

The case $n = 2$ is self-dual, since the (unique) solution of

$$x = 1 + \frac{1}{\phi(x-1)}$$

is $x = 2$; the corresponding curve has no points of inflexion.

6. FUNCTIONAL ROOTS

Hammersley [5] investigated the problem of finding a function f that satisfies

$$f\{f(x)\} = e^x \tag{6.1}$$

†We continue to assume that we are using the g.e.f determined by (2.1). For other g.e.f's (5.9) would need to be modified by replacing $1/\phi(x-1)$ with $\psi\{1/\phi(x-1)\}$; then (5.10) remains valid.

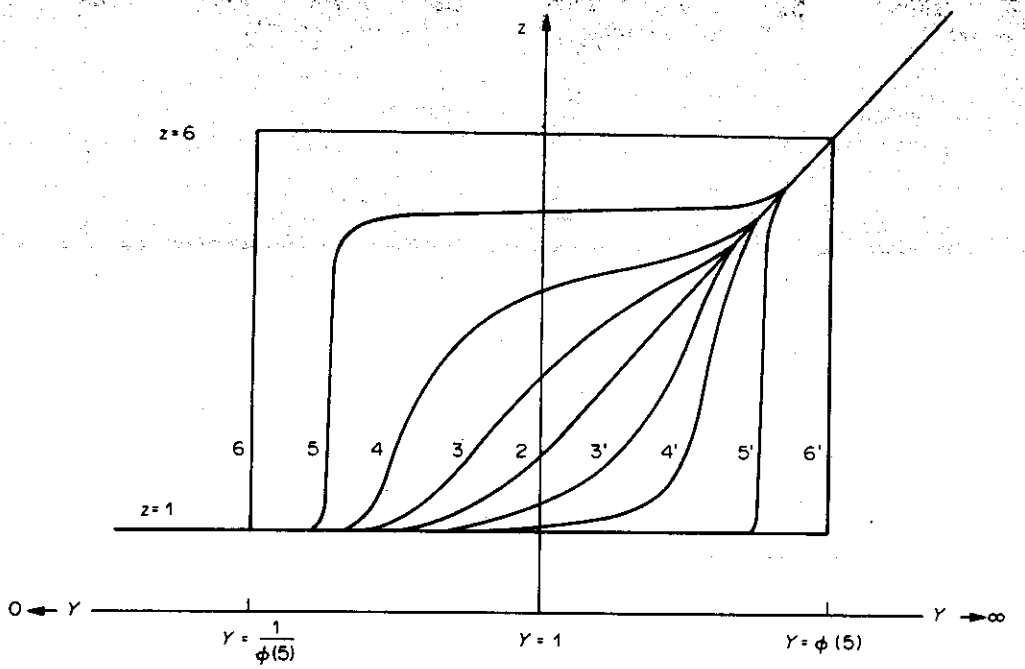

Fig. 5. Sections of power surfaces.

or, more generally

$$f\{f[f\cdots f(x)]\} = e^x \tag{6.2}$$

where the functional operation is applied k times. Hammersley showed that for real variables and any integer value of k exceeding unity, there is an infinity of solutions belonging to $C^1(-\infty, \infty)$, and gave a method for constructing these solutions. He also discussed briefly whether there are analytic solutions of (6.1), and stated that there are no solutions that are meromorphic on the whole complex plane.

As pointed out by Kneser [6] the solution to (6.1) can be expressed in terms of the g.e.f and g.l; thus

$$f(x) = \phi\{\psi(x) + \tfrac{1}{2}\}. \tag{6.3}$$

Similarly

$$f(x) = \phi\left\{\psi(x) + \frac{1}{k}\right\} \tag{6.4}$$

satisfies (6.2). These results may be verified with the aid of the recurrence formula (1.4). If ϕ and ψ belong, respectively, to the classes of g.e.f's and g.l's discussed in Section 3, then the functions $f(x)$ defined by (6.3) and (6.4) are analytic on a domain that includes the real line. They are also real on this line.

7. CONCLUSION

We have outlined some of the properties of a generalized exponential function, and its inverse, a generalized logarithm. We have shown how to construct both C^1 and analytic versions of these functions; in particular we have drawn attention to some of the problems implicit in the definition of the analytic versions. We have indicated how the functions are useful in developing a new form of computer arithmetic, and also in the exploration of properties of very large and very small numbers. Lastly we have noted a connection between this work and the determination of certain functional roots.

Acknowledgements—The authors thank P. L. Walker for drawing their attention to Kneser's paper, and also for providing the numerical values of the coefficients in the series expansion (3.2). The surfaces shown in Figs 1–4 were computed at the University of Maryland and the National Bureau of Standards, and plotted by use of an Evans and Sutherland Picture System 300 at the National Bureau of Standards. The authors are pleased to acknowledge the assistance of R. E. Kaylor and S. Cramer, respectively, with these parts of the work, and also the assistance of Mr Kaylor with the attempts to fit double Chebyshev series expansions to the surfaces for li addition and li subtraction mentioned in Section 4. The research of one of us (F.W.J.O.) has been supported by the U.S. Army Research Office, Durham under Contract DAAG 29-84-K-0022, and the U.S. National Science Foundation under Grants MCS 81-11725 and DMS 84-19820.

REFERENCES

1. C. W. Clenshaw and F. W. J. Olver, Beyond floating point. *J. Assoc. Comp. Mach.* **31**, 319–328 (1984).
2. C. W. Clenshaw and F. W. J. Olver, Level-index arithmetic operations. *SIAM Jl numer. Analysis*. In press.
3. C. W. Clenshaw, Chebyshev series for mathematical functions. *NPL Mathematical Tables*, Vol. 5. H.M.S.O., London (1962).
4. L. Fox and I. B. Parker, *Chebyshev Polynomials in Numerical Analysis*. Oxford Univ. Press (1968).
5. J. M. Hammersley, Functional roots and indicial semigroups. *Bull. Inst. Math. Appl.* **19**, 194–196 (1983).
6. H. Kneser, Reelle analytische Lösungen der Gleichung $\phi[\phi(x)] = e^x$ und verwandter Funktionalgleichung. *J. Reine Angew. Math.* **187**, 56–67 (1948).
7. F. W. J. Olver, A new approach to error arithmetic. *SIAM J. Numer. Anal.* **15**, 368–393 (1978).
8. P. L. Walker, private communication.